D-060 M1 PN 16
D-060-C M1 PN 16
D-062 M1 PN 25
D-065 M1 PN 40

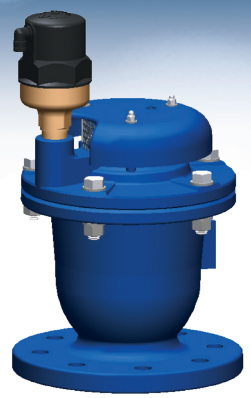

Water Supply

Combination Air Valve for High Flow

Description

The D-060 M1 series Combination Air Valve has the features of both an air release valve and an air & vacuum valve.
The air release component is designed to automatically release small pockets of air to the atmosphere as they accumulate along a pipeline or piping system when it is full and operating under pressure.
The air & vacuum component is designed to automatically discharge or admit large volumes of air during the filling or draining of a pipeline or piping system. This valve will open to relieve negative pressures whenever water column separation occurs.

Applications

- Municipal and industrial water conveyance systems.

D-060-C M1 D-062 M1 D-065 M1 - additional applications
- Water pipelines vulnerable to vandalism and/or water theft.
- Water systems found in remote areas.
- Water systems with pressure demands of 25 & 40 bar (D-062 HF M1 & D-065 HF M1 respectively).

Operation

The air & vacuum component, with the large orifice, discharges air at high flow rates during the filling of the system and admits air into the system at high flow rates during its drainage and at water column separation.
High velocity air will not blow the float shut. Water will lift the float which seals the valve.
At any time during system operation, should internal pressure of the system fall below atmospheric pressure, air will enter the system.
The smooth discharge of air reduces pressure surges and other destructive phenomena.
The intake of air in response to negative pressure protects the system from destructive vacuum conditions and prevents damage caused by water column separation. Air entry is essential to efficiently drain the system.
The air release component releases entrapped air in pressurized systems.

Without air valves, pockets of accumulated air may cause the following hydraulic disturbances:
- Restriction of effective flow due to a reduction of the flow area. In extreme cases this will cause complete flow stoppage.
- Obstruction of efficient hydraulic transmission due to air flow disturbances.
- Acceleration of cavitation damages.
- Increase in pressure transients and surges.
- Internal corrosion of pipes, fittings and accessories.
- Dangerous high-energy bursts of compressed air.
- Inaccuracies in flow metering.

As the system fills and is pressurized, the combination air valve functions in the following stages:
1. Air in the pipeline is discharged by the air valve.
2. Liquid enters the air and vacuum component, lifting the float to its sealing position.
3. Water enters the air release component of the valve, lifting the float and pushing the rolling seal to its sealing position.
4. Entrapped air, accumulating at peaks and along the system, rises to the top of the air release valve, displacing the liquid in the valve's body.
4. The float drops, unsealing the rolling seal. The air release orifice opens and the accumulated air is released.
5. Liquid replaces the air released from the valve, buoying up the float and pushing the rolling seal back to its sealing position.

When internal pressure falls below atmospheric pressure (negative pressure):
1. The floats will drop down, immediately opening the air & vacuum and air release orifices.
2. Air will enter into the system.

Main Features

-Working pressure range:
D-060 M1 0.2 - 16 bar
D-060-C M1 0.2 - 16 bar
D-062 M1 0.2 - 25 bar
D-065 M1 0.2 - 40 bar
- Testing pressure for the air valve is 1.5 times its working pressure.
- Maximum working temperature: 60° C.
- Maximum intermittent temperature: 90° C.
- All main flow cross-sections are equal or greater than the nominal port area.
- Reliable operation reduces water hammer incidents.
- Dynamic design allows for high capacity air discharge while preventing premature closure.
- Special orifice seat design: bronze and E.P.D.M. rubber, assures

long-term maintenance-free operation.
- Screen protected outlet.
- The upper screen is protected with a protective cover.
Air Release Component
- Body made of high strength materials.
- All operating parts are made of specially selected corrosion-resistant polymer materials.
- Large sized air release orifice:
• Dramatically reduces the possibility of obstruction by debris.
• Discharges high air flow rates.
• One size orifice for a wide pressure range (up to 40 bar), achieved by the rolling seal mechanism.

Valve Selection

- Sizes: 3”, 4", 6”, 8", 10", 12".
- **D-060 M1** rated for 16 bar.
- **D-060-C M1** vandalism protected by a metal shell covering the air release component, rated for 16 bar.
- **D-062 M1** vandalism protected by a metal shell covering the air release component, rated for 25 bar.
- **D-065 M1** rated for 40 bar. Sizes: 3”-10".
- These valves are manufactured with flanged ends to meet any requested standard.
- Valve coating: fusion bonded epoxy coating according to the standard DIN 30677-2.
- Other coatings are available upon request.
- The air release component and the air & vacuum component are available as separate units.

Note

For best suitability, it is recommended to send the fluid chemical properties along with the valve request.
Upon ordering, please specify: model, size, working pressure, threads standard and type of liquid.

D-060 M1

A.R.I.

AIR & VACUUM FLOW RATE

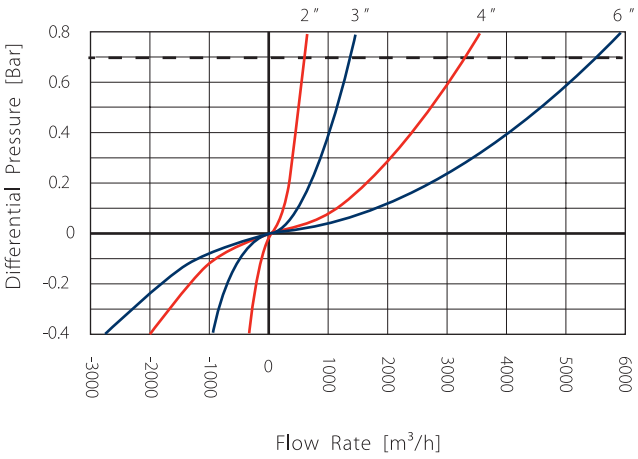

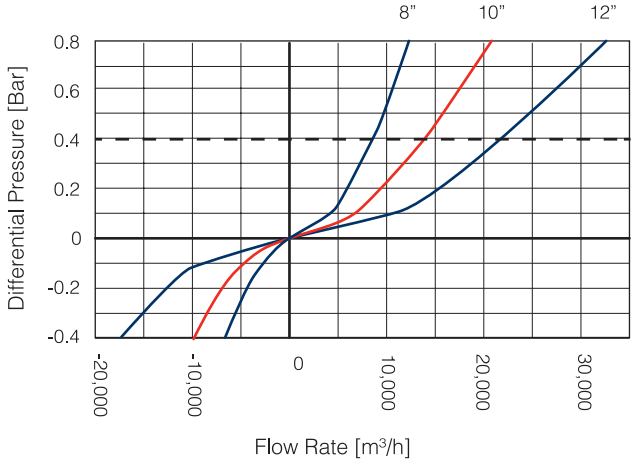

— — — Max. recommended design air discharge

PN 16 AUTOMATIC AIR RELEASE FLOW RATE

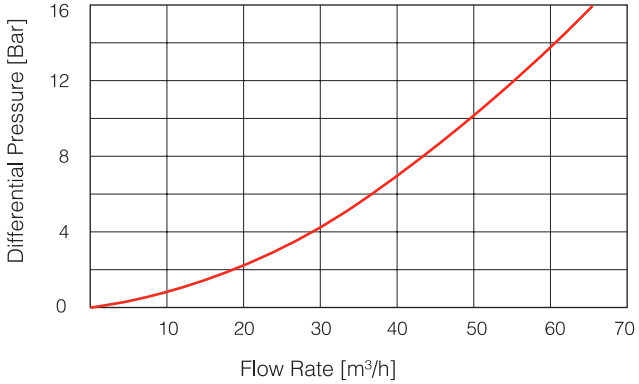

PN 25 AUTOMATIC AIR RELEASE FLOW RATE

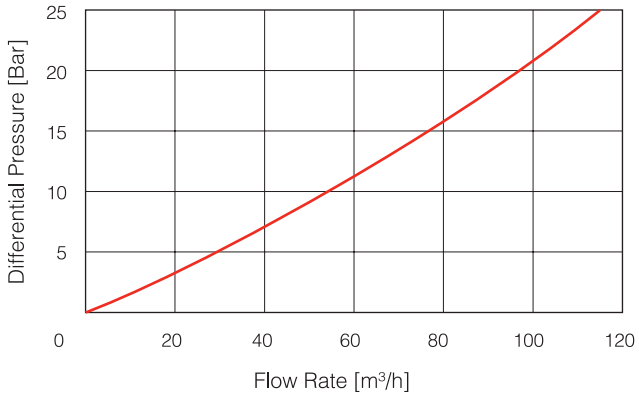

PN 40 AUTOMATIC AIR RELEASE FLOW RATE

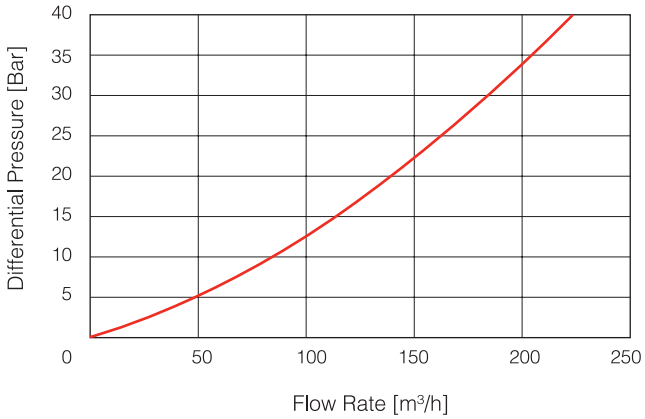

D-060 M1

A.R.I.

DIMENSIONS AND WEIGHTS

Nominal Size	Dimensions mm A	Dimensions mm B	Connection C	Weight Kg.	Orifice Area mm² A / V	Orifice Area mm² Auto.
3” (80mm)	225	334	1/8” BSP Female	10.7 - 11	1960	12
4” (100mm)	250	381	1/8” BSP Female	17 - 18	5030	12
6” (150mm)	307	428	1/8” BSP Female	23.5 - 25	7850	12
8” (200mm)	375	588	1/8” BSP Female	73.5 - 78	17662	12
10” (250mm)	463	645	1/8” BSP Female	141.5 - 150	31400	12
12” (300mm)	586	846	1/8” BSP Female	150 - 162	49087	12

PARTS LIST AND SPECIFICATION

No.	Part		Material
1.	Body		Reinforced Nylon
2.	Air Release Outlet		Polypropylene
3.	Rolling Seal		EPDM
4.	Clamping Stem		Reinforced Nylon
5.	Float		Foamed Polypropylene
6.	O-Ring		BUNA-N
7.	Base		Brass
8.	Strainer		Nylon
9.	Domed Nut & Washer		Stainless Steel 304
10.	Screen Cover	3"-6"	Ductile Iron
		8"-12"	Ductile Iron / Polyethylene
11.	Threaded Rod		Stainless Steel 304
12.	Screen		Stainless Steel 304
13.	Cover		Ductile Iron
14.	Bolt, Nut & Washer		Steel, Zinc Cobalt Coated
15.	Orifice Seat		Bronze
16.	Orifice Seal		EPDM
17.	O-Ring		BUNA-N
18.	Float	3"-8", 12"	Polycarbonate / Stainless Steel
		10"	Stainless Steel
19.	Body		Ductile Iron

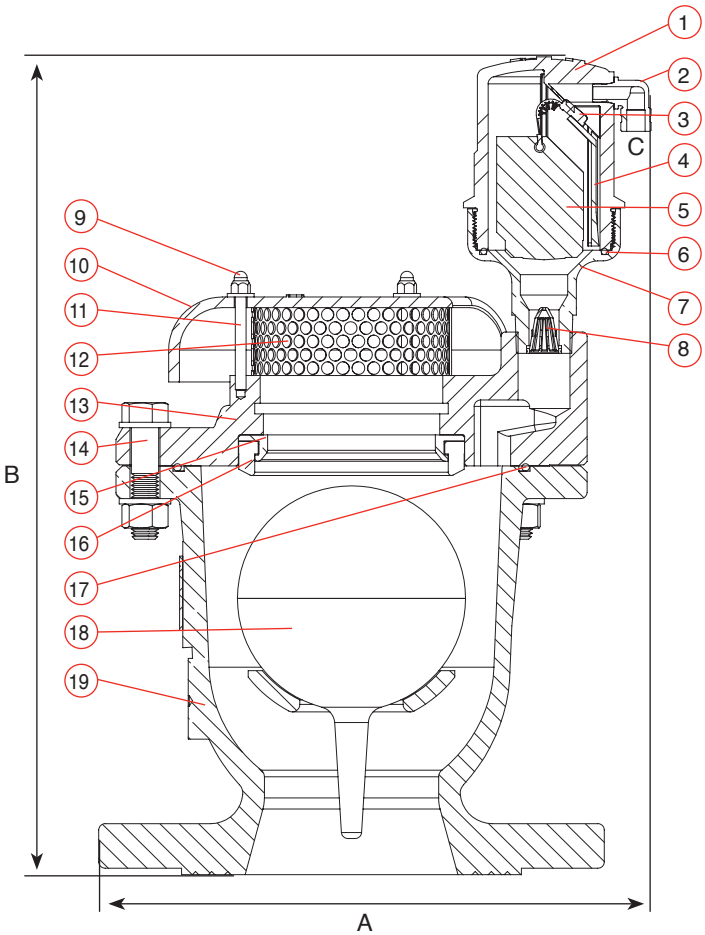

D-060-C M1 / D-062 M1

A.R.I.

DIMENSIONS AND WEIGHTS

Nominal Size	Dimensions mm A	Dimensions mm B	Connection C	Weight Kg.	Orifice Area mm² A / V	Orifice Area mm² D-060-C Auto.	Orifice Area mm² D-062
3” (80mm)	219	344	1/8” BSP Female	13.3 - 13.6	1960	12	9
4” (100mm)	243	390	1/8” BSP Female	20.6 - 21.6	5330	12	9
6” (150mm)	302	436	1/8” BSP Female	35.5 - 37	7850	12	9
8” (200mm)	375	596	1/8” BSP Female	74.5 - 79	17662	12	9
10” (250mm)	463	724	1/8” BSP Female	142.5 - 151	31400	12	9
12” (300mm)	586	853	1/8” BSP Female	150.7 - 163	49087	12	9

PARTS LIST AND SPECIFICATION

No.	Part		Material
1.	Shell		Ductile Iron
2.	Body		Reinforced Nylon
3.	Air Release Outlet		Brass
4.	Rolling Seal		EPDM
5.	Float		Foamed Polypropylene
6.	Clamping Stem		Reinforced Nylon
7.	O-Ring		BUNA-N
8.	Base		Brass
9.	Strainer		Nylon
10.	Domed Nut & Washer		Stainless Steel 304
11.	Screen Cover	3"-6"	Ductile Iron / Cast Iron
		8"-12"	Ductile Iron / Cast Iron / Polyethylene
12.	Threaded Rod		Stainless Steel 304
13.	Screen		Stainless Steel 304
14.	Cover		Ductile Iron
15.	Bolt, Nut & Washer		Steel, Zinc Cobalt Coated
16.	Orifice Seat		Bronze
17.	Orifice Seal		EPDM
18.	O-Ring		BUNA-N
19.	Float	3"-8", 12"	Polycarbonate / Stainless Steel
		10"	Stainless Steel
20.	Body		Ductile Iron

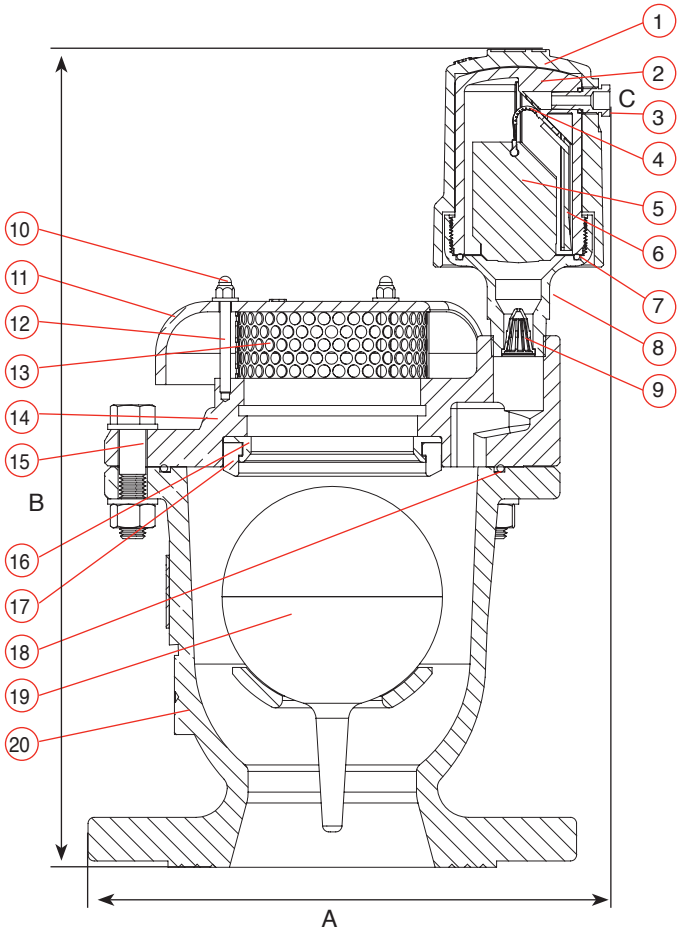

D-065 M1

A.R.I.

DIMENSIONS AND WEIGHTS

Nominal Size	Dimensions mm A	Dimensions mm B	Connection C	Weight Kg.	Orifice Area mm² A / V	Orifice Area mm² Auto.
2" (50mm)	189	459	1/2" BSP Female	11.5	794	15
3" (80mm)	256	487	1/2" BSP Female	12.3 - 12.6	1960	15
4" (100mm)	280	535	1/2" BSP Female	19.6 - 20.6	5030	15
6" (150mm)	340	579	1/2" BSP Female	24.5 - 36	7850	15
8" (200mm)	382	775	1/2" BSP Female	38.2 - 42.7	17662	15
10" (300mm)	471	814	1/2" BSP Female	142.5 - 151	31400	15

PARTS LIST AND SPECIFICATION

No.	Part		Material
1.	Air Release Outlet		PVC
2.	Orifice		Reinforced Nylon
3.	Rollpin		Stainless Steel 304
4.	O-Ring		BUNA-N
5.	Rolling Seal		EPDM
6.	Rollpin		Stainless Steel 304
7.	Lever		Reinforced Nylon
8.	Rollpin		Stainless Steel 304
9.	Cover		Ductile Iron
10.	O-Ring		BUNA-N
11.	Bolt Nut & Washer		Steel, Zinc Cobalt Coated
12.	Float		Polycarbonate / Stainless Steel
13.	Body		Ductile Iron
14.	Adaptor		Brass
15.	Domed Nut & Washer		Stainless Steel 304
16.	Screen Cover	3"-6"	Ductile Iron
		8", 10"	Ductile Iron / Polyethylene
17.	Threaded Rod		Stainless Steel 304
18.	Screen		Stainless Steel 304
19.	Cover		Ductile Iron
20.	Bolt, Nut & Washer		Steel, Zinc Cobalt Coated
21.	Orifice Seat		Bronze
22.	Orifice Seal		EPDM
23.	O-Ring		BUNA-N
24.	Float	3"-6"	Polycarbonate / Stainless Steel
		8", 10"	Stainless Steel
25.	Body		Ductile Iron

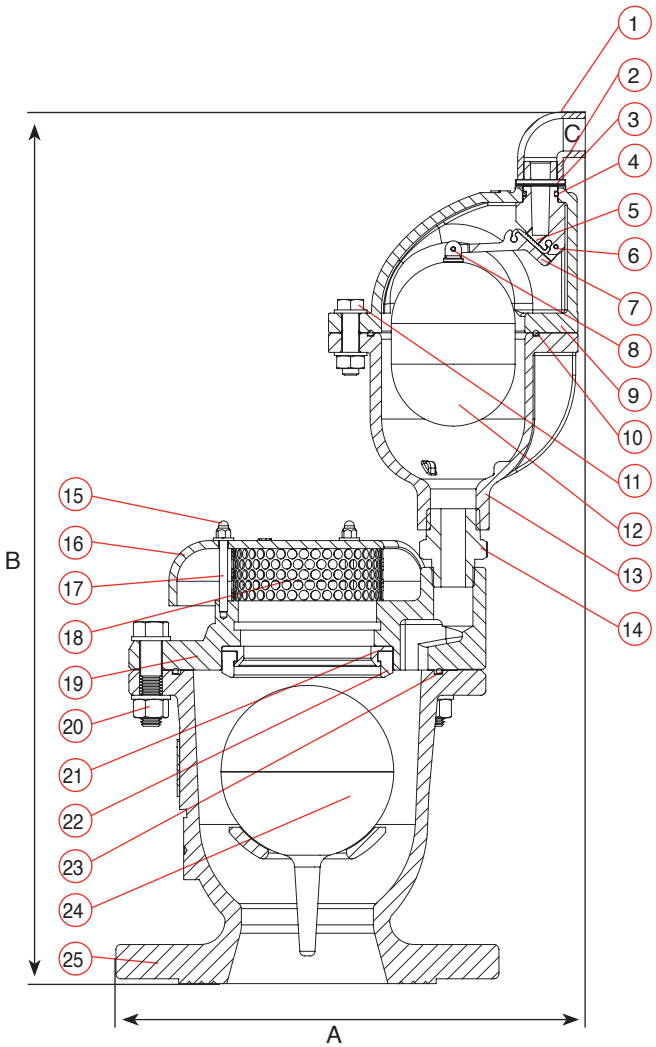

A.R.I. FLOW CONTROL ACCESSORIES Ltd. www.arivalves.com ari@ari.co.il Tel: 972-4-6761988